THE PRISM

SOLID MENSURATION

prepared by:

Gyro A. Madrona

Electronics Engineer

GRADING SYSTEM

FINAL GRADE

30%

PRELIM

30%

MIDTERM

40%

ENDTERM

TERM GRADE

40%

WEEKLY

60%

EXAM

PENALTY

0

ABSENT

3

45-min LATE

5 max

15-min LATE

TOPIC OUTLINE

Properties of a Prism

- Lateral Surface Area
- Total Surface Area
- Volume

Properties of a Cube

- Total Surface Area
- Volume

REVIEW: AREA OF A REGULAR POLYGON

BASIC CONCEPT OF AREA

Area is the number of **squares**

square meters | m^2
square inches | in^2

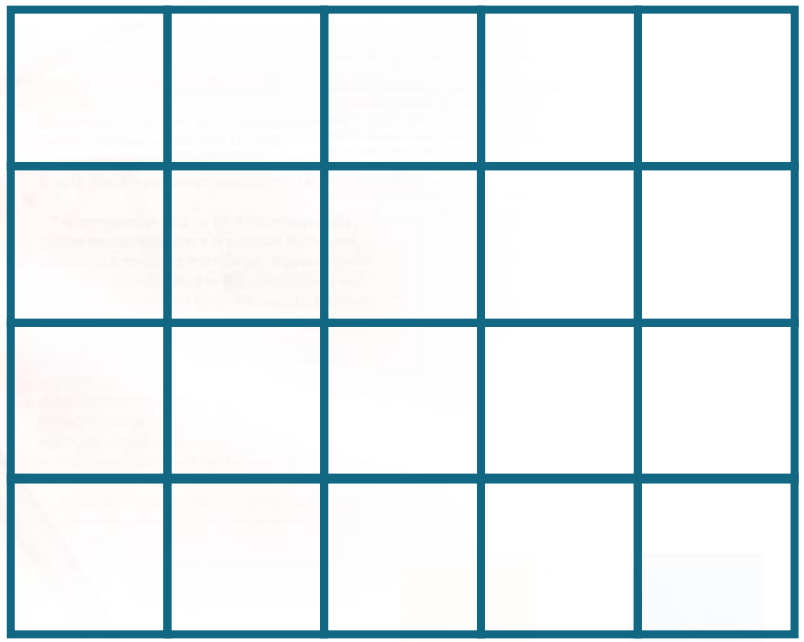

BASIC CONCEPT OF AREA

Area is the number of **squares**

square meters | m^2
square inches | in^2

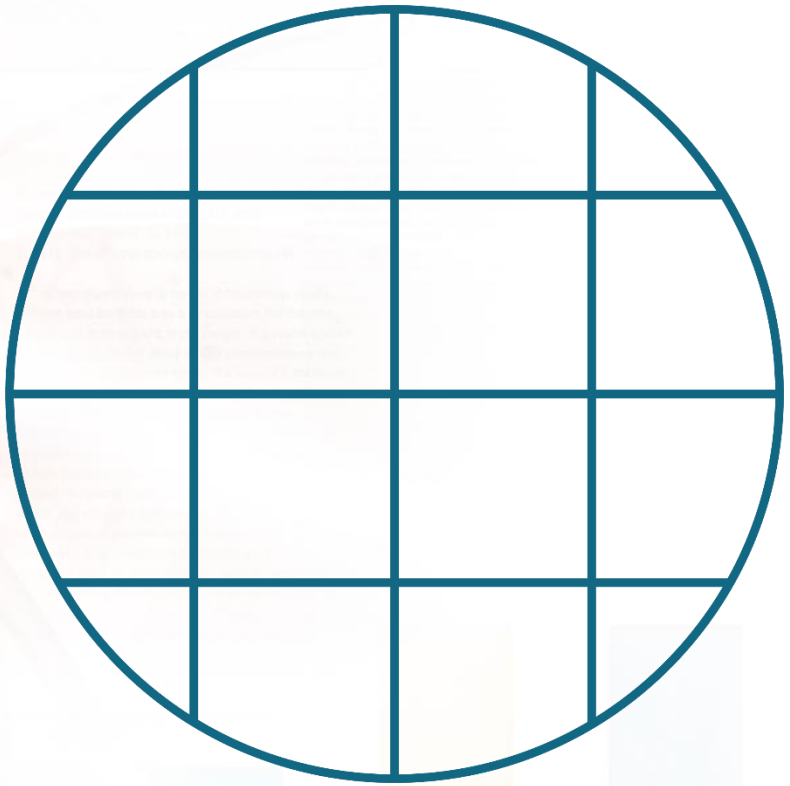

BASIC CONCEPT OF VOLUME

Volume is **area × height**

cubic meters | m^3

cubic inches | in^3

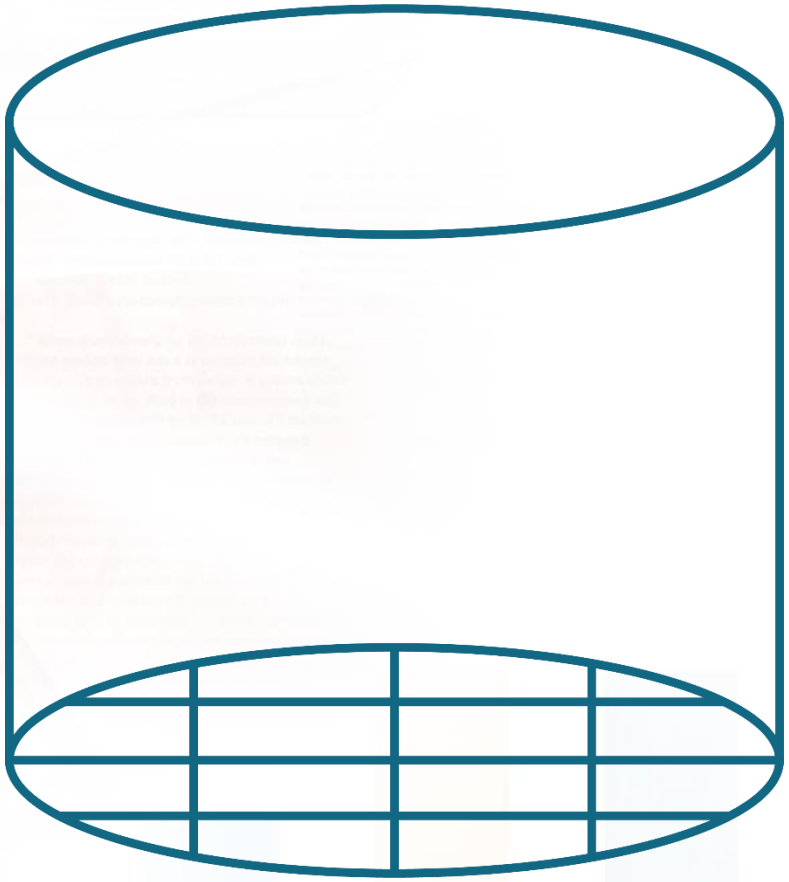

AREA OF A REGULAR POLYGON

$$A = \frac{1}{2}aP$$

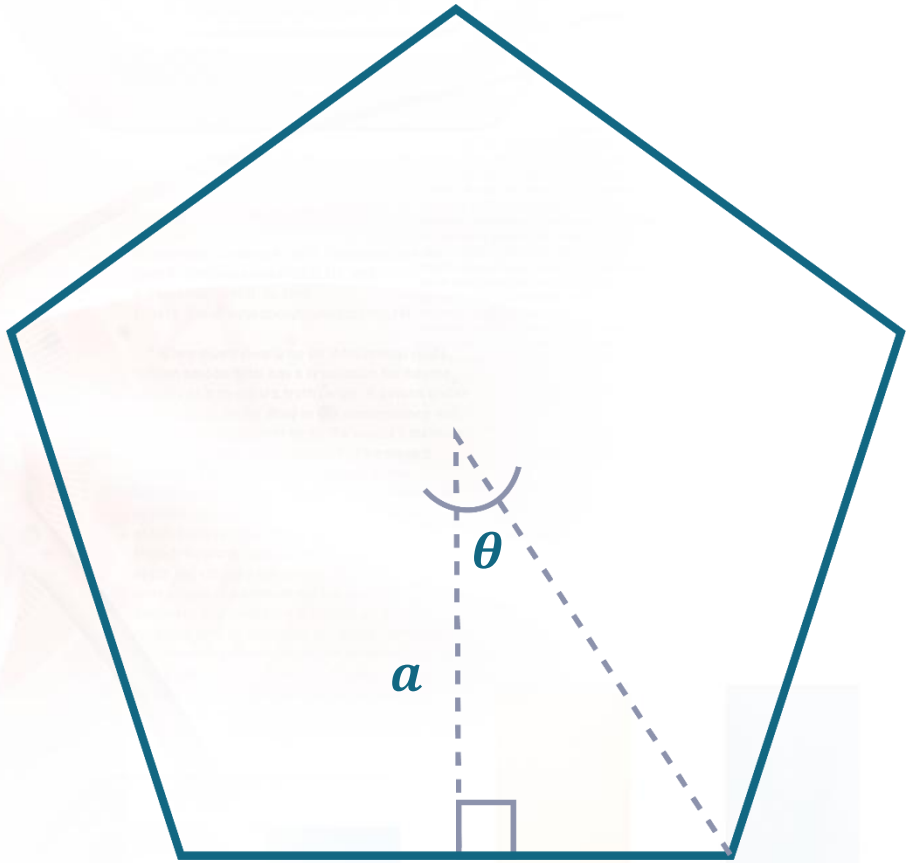

where

$a = apothem$

$P = Perimeter$

$$\theta = \frac{360^\circ}{2n}$$

$n = no.of\ nodes$

PROPERTIES OF A PRISM

DEFINITION

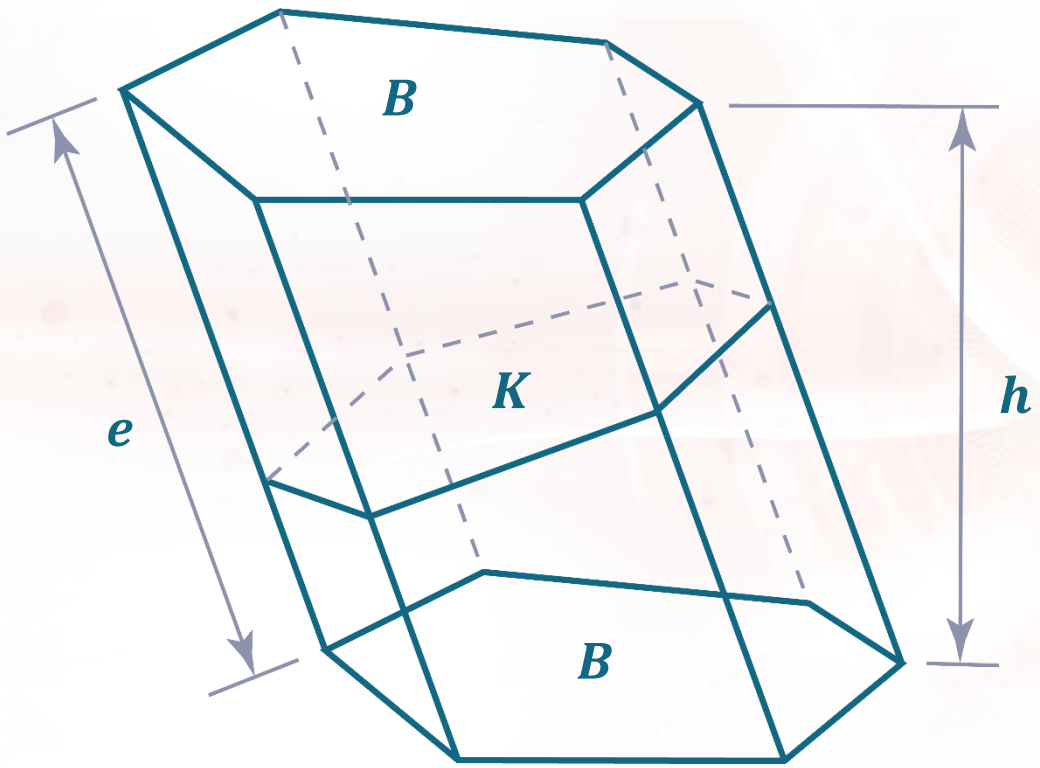

A **prism** is a polyhedron of which two **faces** are **equal polygons** in parallel planes, and the other faces are **parallelograms**

PROPERTIES

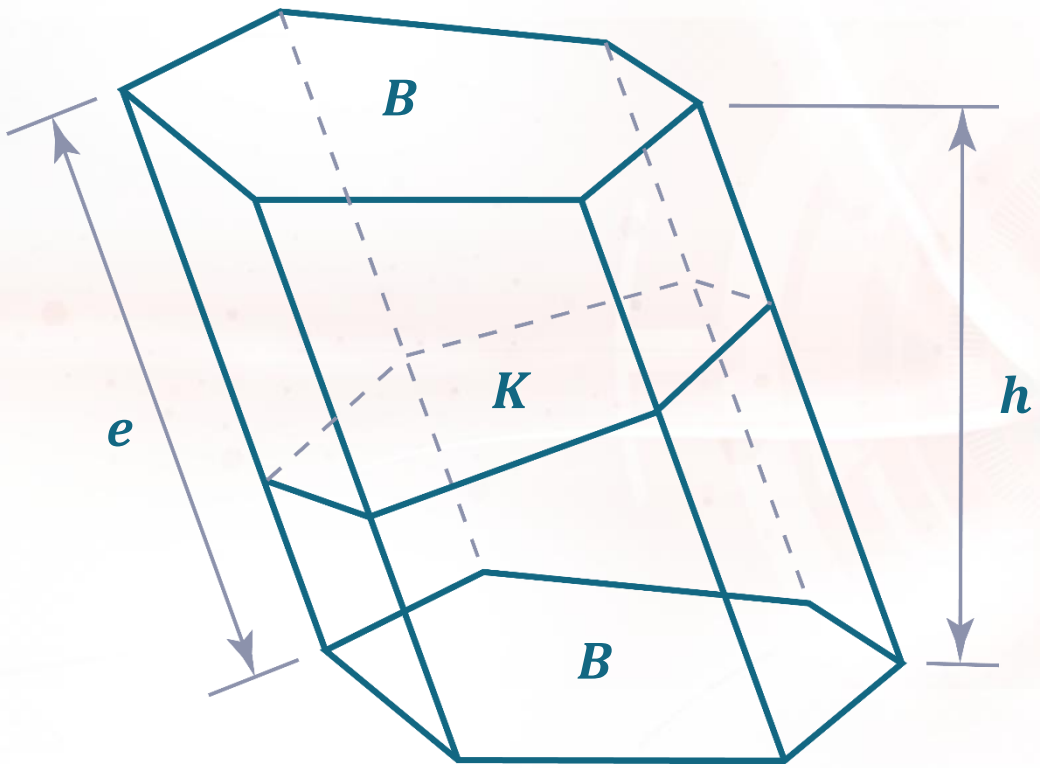

1. The **bases, *B*** are the equal polygons; the lateral area is the sum of the areas of the remaining faces.
2. The **altitude, *h*** of a prism is the perpendicular distance between the planes of its bases.
3. The intersections of the lateral faces are called the **lateral edges, *e***.
4. A **right section, *K*** of a prism is a section made by a plane perpendicular to the lateral edges.

AREA OF A PRISM

LATERAL SURFACE AREA

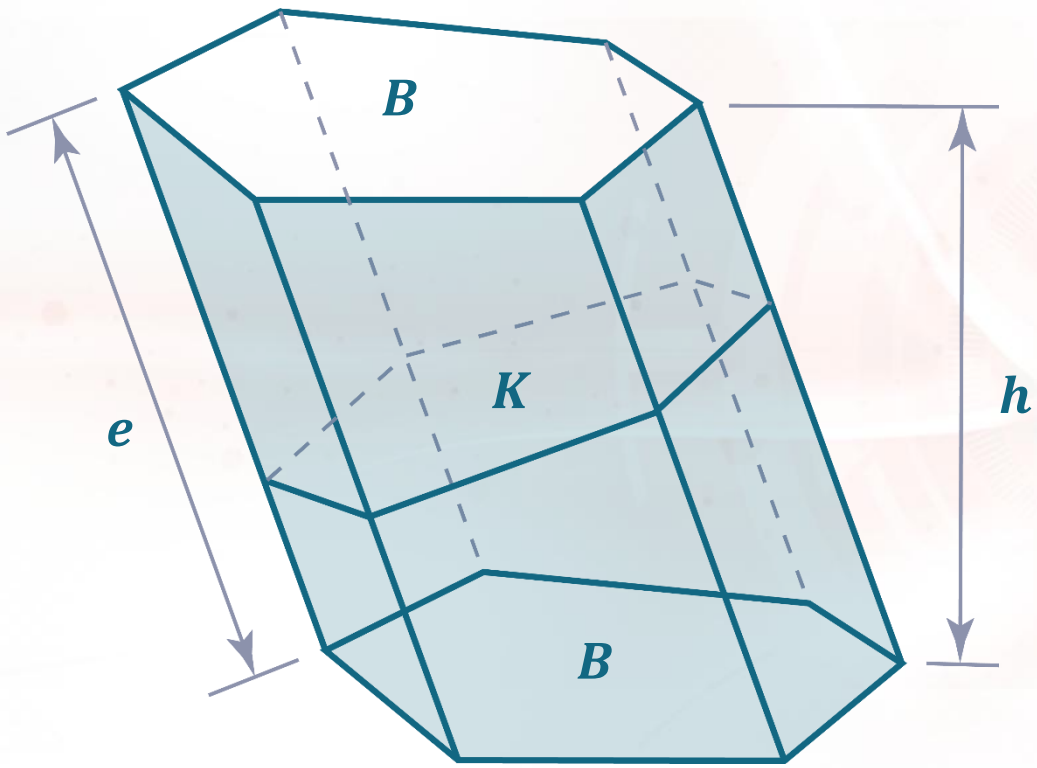

The Lateral Surface Area **S**

$$S = eP$$

where

e = lateral edge

P = perimeter of right section

TOTAL SURFACE AREA

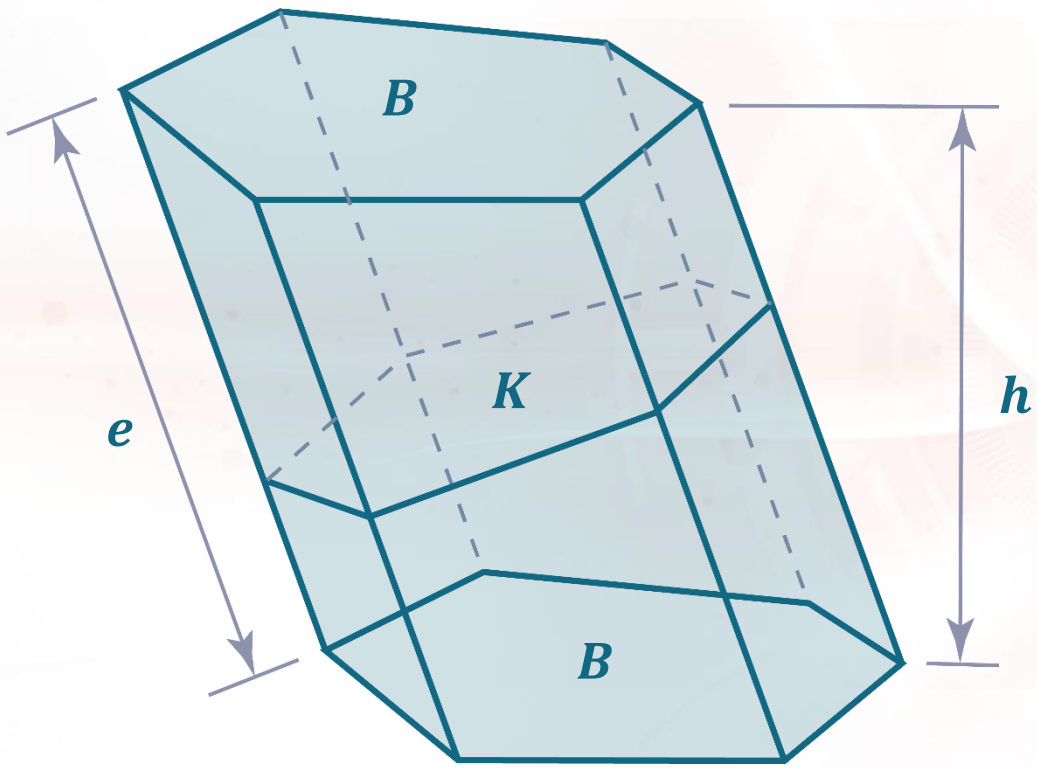

The Total Surface Area **T**

$$T = 2B + S$$

where

B = area of either base

S = lateral surface area

EXERCISE

The lateral surface of a concreate **octagonal** pier of **height 10** ft. is to be resurfaced. If each of the **base edges** is **1** ft., how many square feet of **surfacing** will be required?

VOLUME OF A PRISM

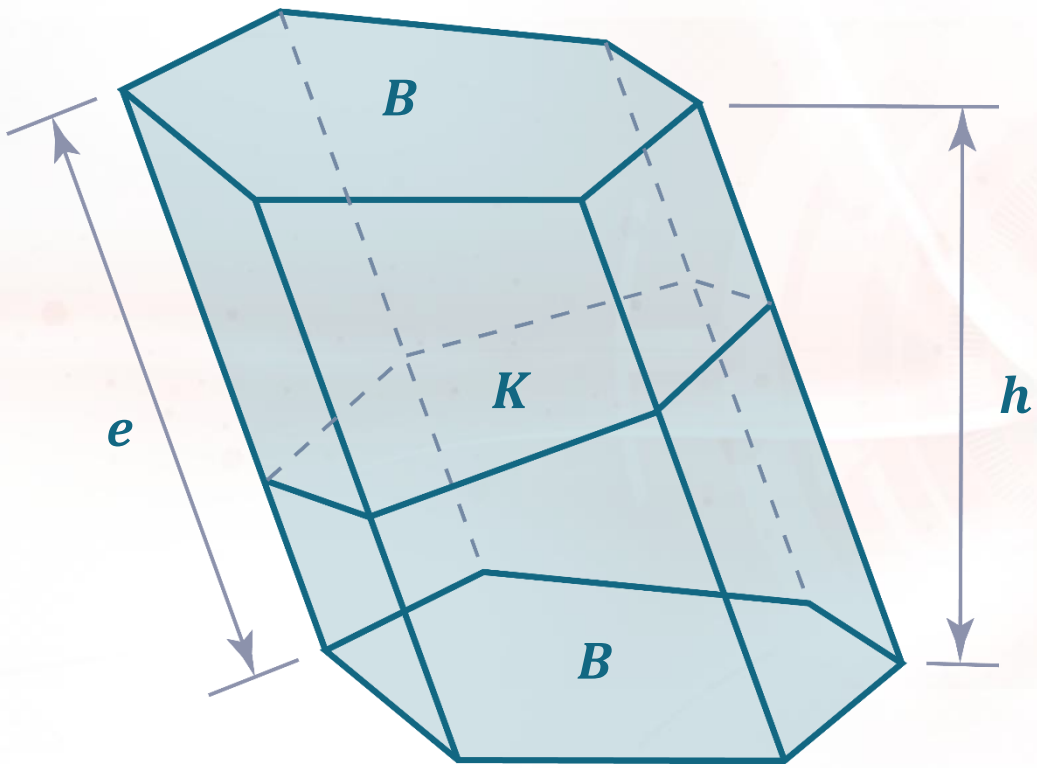

The Volume **V**

$$V = Bh$$

$$V = Ke$$

where

B = area of either base

$h = altitude$

$K = area\ of\ right\ section$

$e = lateral\ edge$

A lead pencil whose ends are regular **hexagons** was cut from a cylindrical piece of wood, with the least waste. If the original piece was **8 in. long** and **½ in**. in **diameter**, find the **volume** of the pencil.

PROPERTIES OF A CUBE

DEFINITION

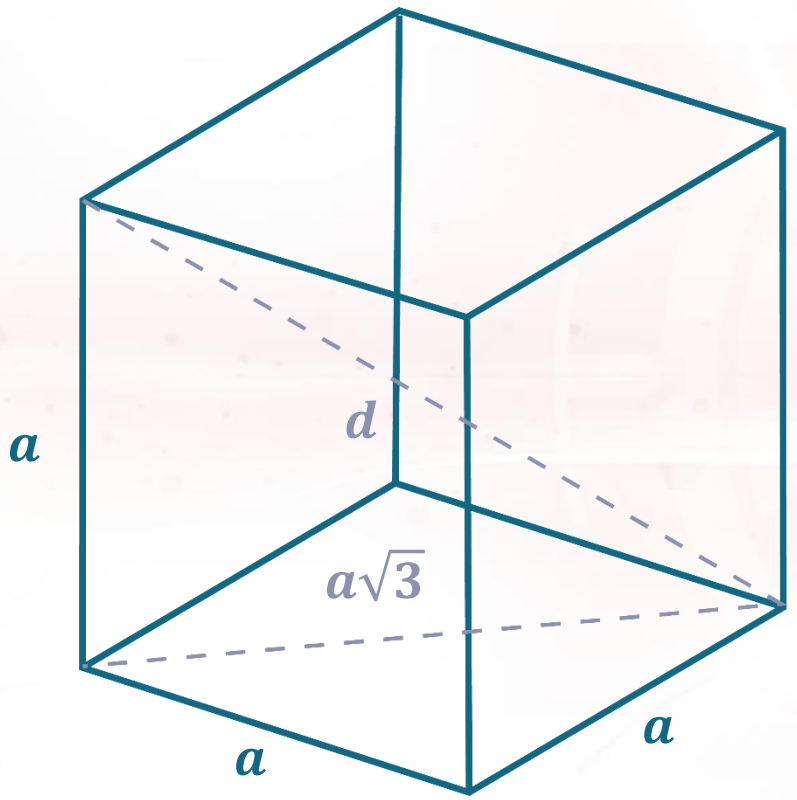

A **cube** is a parallelopiped whose **six faces** are all **squares**.

PROPERTIES

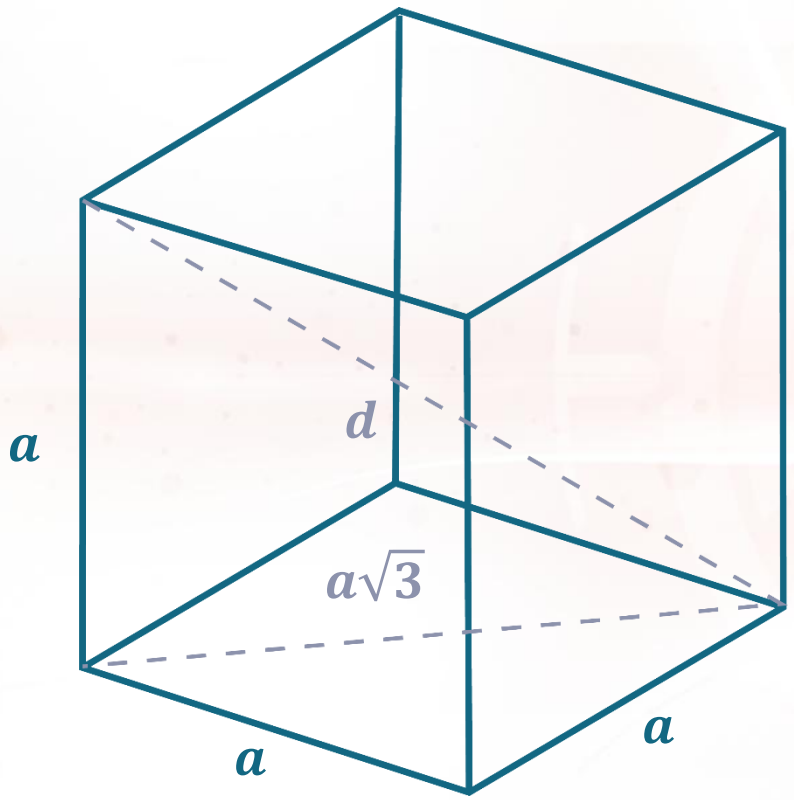

1. The three dimensions of a cube are equal to each other. Therefore, all **edges, a** are equal.
2. All the faces of a cube are congruent **squares**.
3. A **diagonal** of a cube is equal to $\sqrt{3}$ times an edge ($i.e.$, $\boldsymbol{d = a\sqrt{3}}$).

AREA OF A CUBE

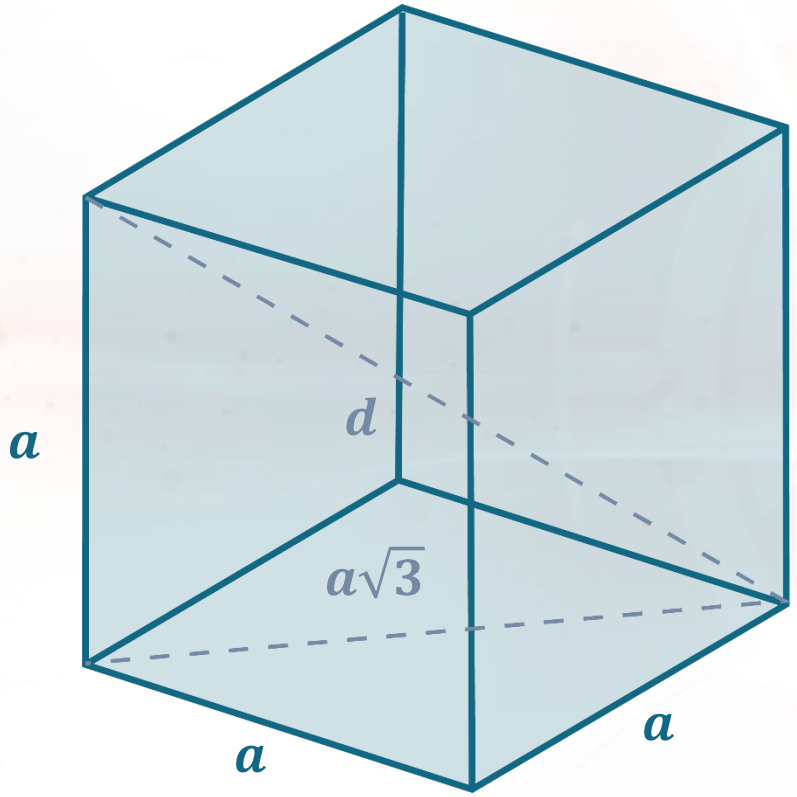

The Total Surface Area **S**

$$S = 6a^2$$

$$S = 2d^2$$

where

a = edge

$d = diagonal$

EXERCISE

Consider a **cube-shaped** box with an **edge** length of **6 cm**. A **cylindrical hole** with a **radius** of **2 cm** is drilled straight through the center of the cube, perpendicular to its faces. What is the **total surface area** of the cube **remaining** after the hole is drilled through it?

VOLUME OF A CUBE

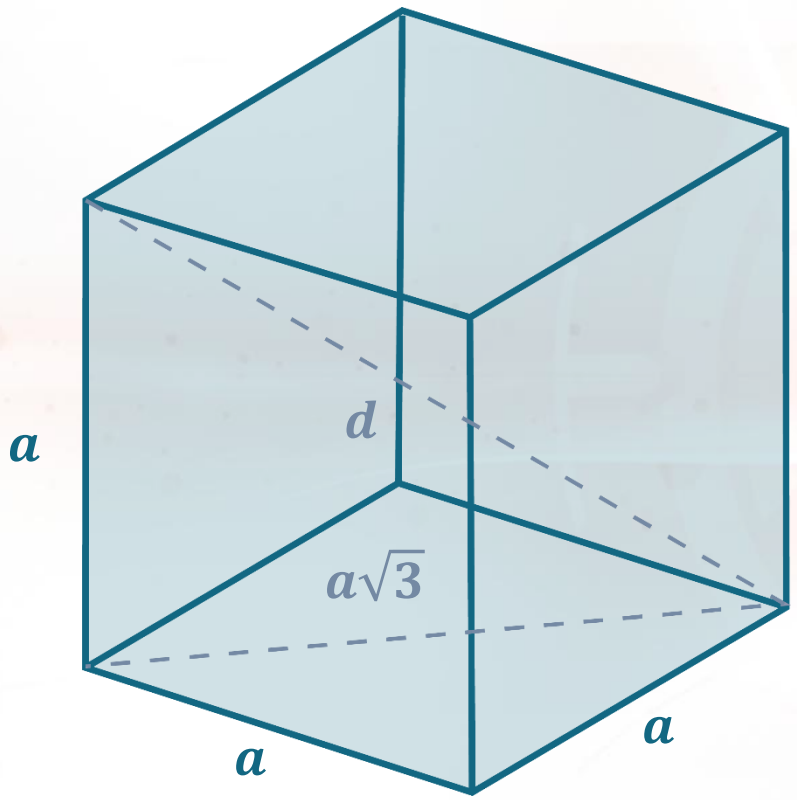

The Volume **V**

$$V = a^3$$

$$V = \frac{1}{9}\sqrt{3d^3}$$

where

a = edge

$d = diagonal$

EXERCISE

A company needs to manufacture a storage container in the shape of a **cube** such that the length of each **edge** cannot exceed **20 inches** due to space constraints. The cost of constructing the container is **2.5 PHP per cubic inch**. Determine the **cost** required to build such cube-shaped container.

SEATWORK